Cerlic CBX
Sludge Blanket Monitor

Index

Contents

General information

It is of great importance to read all parts of this manual prior to startup of the instrument. If the Blanket Monitor is not used and handled according to this manual, then the life and functionality may be jeopardized, and all warranties will be voided.

Security information

This instrument should be used by qualified and authorized personnel only.

It is mandatory to follow all security and other routines that apply at site when using the CBX.

Within EU it is prohibited to dispose of electric and electronic waste in regular waste as these may contain harmful substances. All electric and electronic waste must be sorted and left for recycling. Such products are labeled with an X-marked waste bin. It is important that everyone cooperate in order to secure a high level when it comes to recycling and help to save our environment. If such waste is handled and recycled according to regulation (EC Directive 2002/96/EC) the environment as well as people's health may be jeopardized

Description of the function

CBX is an optical suspended solids meter designed to measure sludge and fluff blanket depth in clarifiers, thickeners, etc. in water and wastewater plants, as well in other facilities. It is possible to display measured values as text or as a graphic image of the sludge profile.

Working principle

The sensor is sent down into the clarifier/thickener and measures the suspended solids as it descends and sends the data via a communication cable to the BB2 control box. By submersing the sensor into the liquid you are able to obtain reliable suspended solids readings versus depth and avoid problems from foam and fluff layers in the clarifier/thickener.

Sensor body

The sensor body contains optics and electronics that should not be exposed to mechanical abuse or high temperatures. If the sensor body has mechanical damages, water may penetrate into the sensor and destroy the electronics and optics. Please see section Maintenance for more information.

Installation

It is important that installation, maintenance and configuration only are done by authorized personnel to avoid damages on the product. .

Unpacking

The unit has been tested and approved before delivery from factory. Please check to confirm that no visible damages occurred during shipment. Make sure that all equipment inside the cabinet is secure and that the sensor and cable can move freely.

Damages

If damages occurred during shipment, immediately contact your shipper as well as your Cerlic representative within 2 days of receipt. The shipment may be returned only after contact has been made with Cerlic.

Packing

The original packing is designed to protect the equipment and should be used for storage or if the goods must be returned. If other packing material is used Cerlic is not responsible for damages during transport.

Content

Please check that the content corresponds to your order and packing list.

Options

	P/N
• SS Handrail Mounting Bracket	10305893
• BB2 Control Box	11905426
• BB1 Control Box	11905885
• Mounting plate for BB1/2	10305532
• M12 Cable 1.5m (5')	20805752
• M12 Cable 10m (33')	20805510
• M12 Cable 30m (100')	20850727
• Sensor with 33' cable	11305888
• Flushing Valve 115V	11705516B
• Motor 115V	21750924
• Fan 115V	21750926
• Door key	20305403

Accessories

• Cerlic Sensor Cleaning Fluid (CSC)	10905944
• CBX Jacket (for cold weather)	11205969

Starting up

Connect the CBX to the BB1/BB2 and connect 110/1/60 power to both units. BB1/BB2 must have program version 3.1 or higher so it will automatically detect and connect to the CBX.

Mechanical installation

Mechanical mounting is described in appendix 1 "Mounting of stand". When CBX is installed outdoors there is a risk of flush lines freezing at sub zero temperatures. This will not damage the instrument but the automatic cleaning function will stop working. It is also recommended to use a CBX Jacket (P/N 11205969) when there is a risk of temperatures below 23ºF (-5ºC).

Water connections

On the bottom right hand side of the cabinet there is a ½" NPT male connection for flexible flush hose. A description of the connection can be found in appendix 3 "Mounting of hose". Outdoor installations must protect water pipe or hose from freezing conditions or the water must be disconnected and emptied to avoid the hose or valve from freezing. Under all circumstances flushing should be avoided when the outdoor temperature is below 0 ºC (32ºF).

Electrical connection

In the bottom lower left corner of the cabinet there are the four (4) ½" NPT female electrical connections. Any wires required to go outside the cabinet can be found here. Electrical connections must be installed by authorized personnel only. The connections are terminated in the junction box inside the cabinet on the left side. Description is given in appendix 3 "Electrical connections".

Sludge rake guard limit switch, Trigger

All sampling modes are dependent of the connection of a rake guard limit switch which is a N/O (normally open) contact. The digital input for the limit switch can be used in several different ways for control of the CBX

NOTE! A limit switch must be used in all applications where a rake or other moving equipment may come in contact with the sensor or cable. Cerlic Controls AB does not assume any responsibility for damages caused by the absence or malfunction of the rake guard limit switch.

User interface

The BB1/BB2 will show the CBX as a standard "X" sensor on the display and it will show both sludge and fluff level in text on the display.

Configurations

The figure below shows the different terms used for distances that are involved in the configuring of the CBX.
To set the basic parameters like, max depth, Blind zone and scale do the following.
Lower the sensor head to 1' (0.3m) below the liquid surface (see calibration section for instructions), note the distance on the BB1/BB2. This is the length of cable to the **blind zone** (**B**) . Continue to feed the sensor down until the sensor is just touching the bottom. You can see this by watching the cable, when the sensor is all the way down the cable will go slack. Feed sensor back up until you have about 2" (5 cm) of clearance between the bottom of clarifier and sensor. Note the distance on the BB1/BB2, this is the **Max Depth** (**C**). Exit the Manual UP/DOWN mode and scroll down to "CBX setup" and enter the "blind zone (B)" and "Max depth (C)". Exit CBX Setup and enter "Scale / Alarm" and scroll to "Max" which will be your **measuring scale** (**E**). Calculate measuring range by subtracting Blind zone from Max depth (**C-B=E**). Measuring range is the max depth for sludge and fluff that correspond to 20mA on channel 1 (blanket) and 2 (Fluff). Do not forget to set **Rake height** (**F**) if you have a bottom rake or if you want to compensate for a slope.

LED indication

Red	Yellow	Green	Status
			CBX Start Up, Light Test
			Standby, waiting for next sample cycle
			Configuration or Setup Mode
	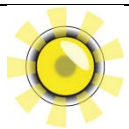		Sampling
			Configuration or Setup error, check parameters
			Mechanical or Electrical Problem
			Cold Temp, less than 3ºC inside the unit. Shut down the CBX to alleviate cold weather damage

Fig 1

Operation

All configurations are done via BB1/BB2 that is connected to the CBX. All settings shall be done and saved (done by exiting the menu) before a new sampling is performed. Depth and concentration is shown on the BB1/BB2 on-line during a sampling cycle.

CBX Mode

There is two different modes the CBX can be set to, **Setup** and **Trig**.
Trig is the normal working mode. In this mode the CBX will take a sample on every external trig from the rake limit switch.
Setup, the CBX must be set to this mode before changing calibration parameters or using "**MANUAL UP/DOWN**" button.

Rake interval

The rake limit switch starts a measuring cycle. When the rake is passing the rake limit switch the CBX will execute a sampling cycle. It is possible to configure the number of pulses from the rake switch (i.e. number of rake passes) that is needs for a measuring cycle to start. This parameter is called "**trig**". It can be used for delaying the time between the samples, normally you will take a sample every 30 - 45 minute. The pulse from the rake limit must not be longer than one complete measuring cycle on the CBX.

Emergency retraction of the cable

If the CBX for some reason does not retract the cable, then it is possible to do manually. But always try to switch off the main power to the CBX for 10 seconds and then back on line again. The CBX will always start with retracting the cable to "**home position**" after a power loss. If the cable still does not retract use the emergency motor control switch that is located on the box for the terminal block inside the CBX. The switch can be located on top of the terminal box or under the lid. As a safety feature, you must press and hold the door switch in during manual operation.

NOTE!
As a safety you must press and hold the door switch in during manual operation.

Configuration terms

Home position, A
The sensor will always return to this position.

Blind zone, B
Sludge or foam detected in this zone during lowering of the sensor is not registered. Unwanted interference is prevented by setting this zone to be 1' (0.3m) below the normal liquid surface. Sensor does not start to measure until it reaches this distance.

Max depth, C
This is the maximum distance from the home position. The sensor will stop at this depth if no sludge is detected. The sensor might stop and return at a shorter distance if a rake guard offset (F) is entered.

Sludge level, D
The sludge level distance from bottom found when the preset sludge concentration is reached.

Measured range, E
The output signal will vary from 4-20 mA within this range.

Rake height, F
This denotes the safe height from the bottom (Max depth) to a point where the sensor always must stop and then turn back to home position to alleviate hitting the bottom rake.

Fluff level, G
The fluff layer or depth found when the present fluff concentration is reached.

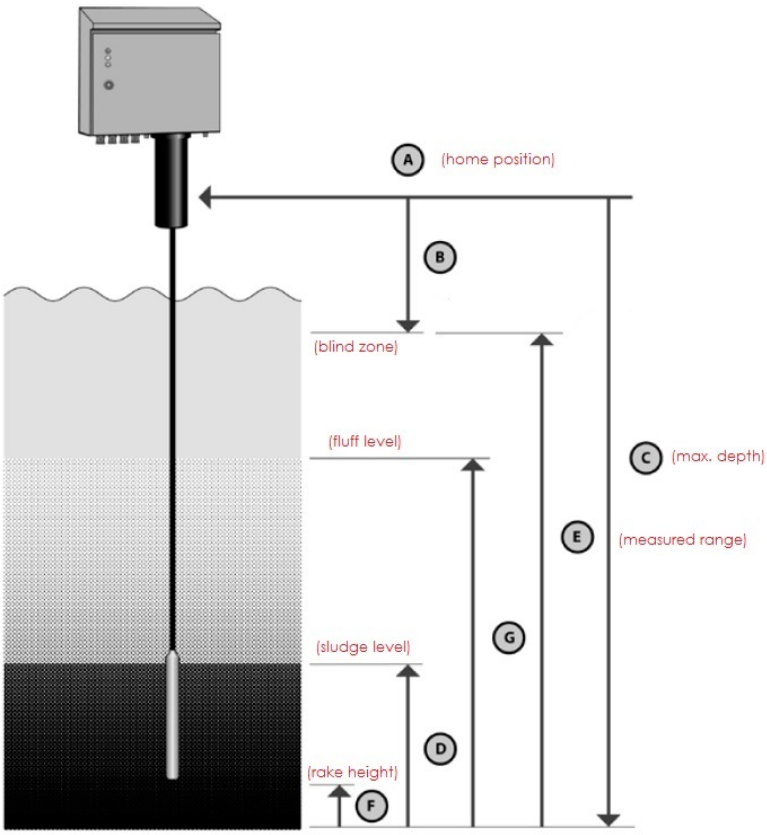

Fig 2

BB1/BB2 menu for CBX

This section describes the menus used in BB1/BB2 to set up the CBX for operation. **! Important,** you need to exit the Settings menu to save the parameters or changes!

Settings

Tag		Name of the sensor (10 characters) shown on the main display.
I-Time[s]		Integration time or dampening - can be set up to 999 seconds. This is integration in BB1/BB2. The value coming from CBX is normally also an average.
Manual up/down		Enables the BB1/BB2 to control the sensor in the CBX to go UP and DOWN. In this mode the depth and concentration are displayed in the BB1/BB2 . Must change "MODE" to "TRIG" to activate.
Depth Unit		Unit used for distances in CBX settings in m, cm, inches or feet & inches.
Cons units		Unit for measure in "%", "ppm", "g/l", or "mg/l"
Analog		Set the analog output channels for sludge blanket depth (distance D in fig 4) as primary and (optional) second analog for fluff (distance G in fig 4) if used.. 1, 2, 3, 4, 1&2, 3&4, all or none. Standard is **all**
Second		This shows the height of the fluff layer from the bottom
Blanket Concentration		Set the consistency that will define the blanket. This can be done by entering a blanket concentration.
Fluff Cons	**(optional)**	Set the concentration that will define the fluff layer. This can be done by entering a fluff concentration.
CBX setup		Sub Program for initial CBX set-up
	Mains freq	The frequency of the power, i.e. 50HZ in Europe and 60Hz in the USA.
	Trig	Number of trig closures before lowering the sensor

CBX Setup

Max depth	The maximum travel distance from home position **(A)**. The sensor will stop at this depth if no blanket or sludge is detected **(Distance C)**. This travel distance will be shortened if a rake offset exists **(distance F)**
Blind zone	**Distance B**. Distance to where sensor must travel before it starts to measure solids. Sludge or foam detected in this zone during lowering is not registered. Unwanted false blanket depth is prevented by setting this zone to be approximately 25cm (1 ft) below liquid surface.
Rake height	**Distance F**. Denotes the safe height (in cm's) from the bottom (**Max depth**) to a point where the sensor always must stop and then turn back to home position to alleviate hitting the bottom rake.
Rake trig delay	The rake switch starts a measuring cycle. When the rake has activated the rake switch so the CBX will execute a sampling cycle. It is possible to configure the number of pulses from the rake switch that is needs for a measuring cycle to start.
Track	**Profile/Level**. You can set if the CBX shall measure sludge profile or only sludge and fluff levels. If the CBX is set to **Level** the sensor will stop when it detects the sludge level and return home.

Calibration

Mode	**Setup**: The CBX must be set to this conf. mode before changing calibration parameters or using "**MANUAL UP/DOWN**" button. **Trig**: This is the normal working mode. In this mode the CBX will take a sample on every external trig. Set CBX back to Trig for normal use..
Manual up/down	Enables the BB1/BB2 to control the sensor in the CBX to go UP and DOWN. In this mode the depth and concentration are displayed in the BB2. . Must change "**MODE**" to "**TRIG**" to activate.
Take sample	**No / Zero / Sample** - Chose the type of calibration. Zero is for clean water and Sample is sludge sample or concentration.
Cons	Current concentration.
Sample	Enter concentration from Lab test – concentration/suspended solids value for Sample.

Cleaning

Cleaning	**Yes/No.** The cleaning cycle & control of it is built into the CBX internally and should not be altered here.
Manual up/down	Enables the BB1/BB2 to control the sensor in the CBX to go UP and DOWN. In this mode the sensor is switched off and can be left out for an unlimited time for cleaning. Must change "**MODE**" to "**TRIG**" to activate.

Scale / Alarm

Max	Max level or 20 mA output, **distance E in fig 2**
Min	Min level or 4 mA output
Hi-Alarm	Max level for alarm
Low-Alarm	Min level for alarm
Alarm Relay	Pick which alarm relay is to be used on the BB1/BB2

System

Type	Type of sensor, read only information
Serial	Serial number of the sensor, read only information
SoftW	Software version of the sensor, read only information
Info	
Ch1	Info, measured light value on channel 1
Ch2	Info, measured light value on channel 2
Samples	Counter that shows total number of samples taken by the CBX from the last power off.

Timer

Timer	On/Off, switch the timer function on or off
Interval min	Delay time between samples in minutes
Relay	Relay 1/ Relay 2, can be used as level alarms. You can configure one of the internal relays as a timer to start the CBX if you do not have a rake to use as a trigger.
Next time	Next time the sample starts

Information display

If you press ↓ and ENT key at the same time you will see an information display that shows the status of the display.

If you press one more time at the ↓ and ENT key you will see a graphical profile of the last sampling (available on software on the BB1/BB2 3.23 and later) .

The profile shows fluff and sludge level, the top number is fluff level and the lower number is sludge level measured from the tank bottom and up.

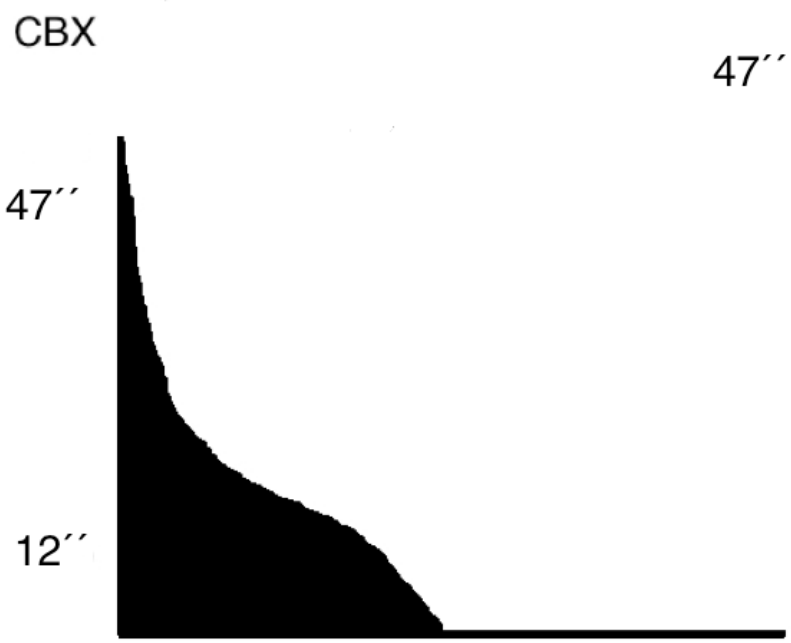

fig 3

Profile

CBX users can get the sludge profile using the 4 output signals on the BB2. It is updated at the end of each sampling cycle (channel 3 & 4 are real-time during sampling). This option requires an extra card in theBB2 unit with two more 4-20mA signals (total 4 outputs). To have a good resolution on the profile, sample CH3 and CH4 with 1 Hz. Attach the extra mA card to the BB2 (P/N 11905782) see appendix 6.

Follow the checklist below to get started

- Set the analog outputs on the BB2 to "all" (settings/analog)
- Set second to "fluff" (settings/second)
- Set the track to "profile" (settings/CBX setup/track)

The analogue 4-20mA assign to the following channels when using "profile"

Channel 1	Level of sludge blanket, signal updated every time a new measurement is done. Scale is the same as (scale/alarms/Max depth).
Channel 2	Level of fluff blanket, signal updated every time a new measurement is done (scale/alarms/Max depth).
Channel 3	Real-time concentration (on-line) during a sample otherwise 0. Scale is looked to 0-10,000 mg/l.
Channel 4	Real-time depth of sensor (on-line) during sampling otherwise 20mA. Scale is same as (scale/alarms/Max depth) See graph below how a typical profile can look like when you have about 1ft of sludge and 3ft fluff on top of the sludge.

See *fig 4* on next page for detailed information how this can be displayed.

Profile data

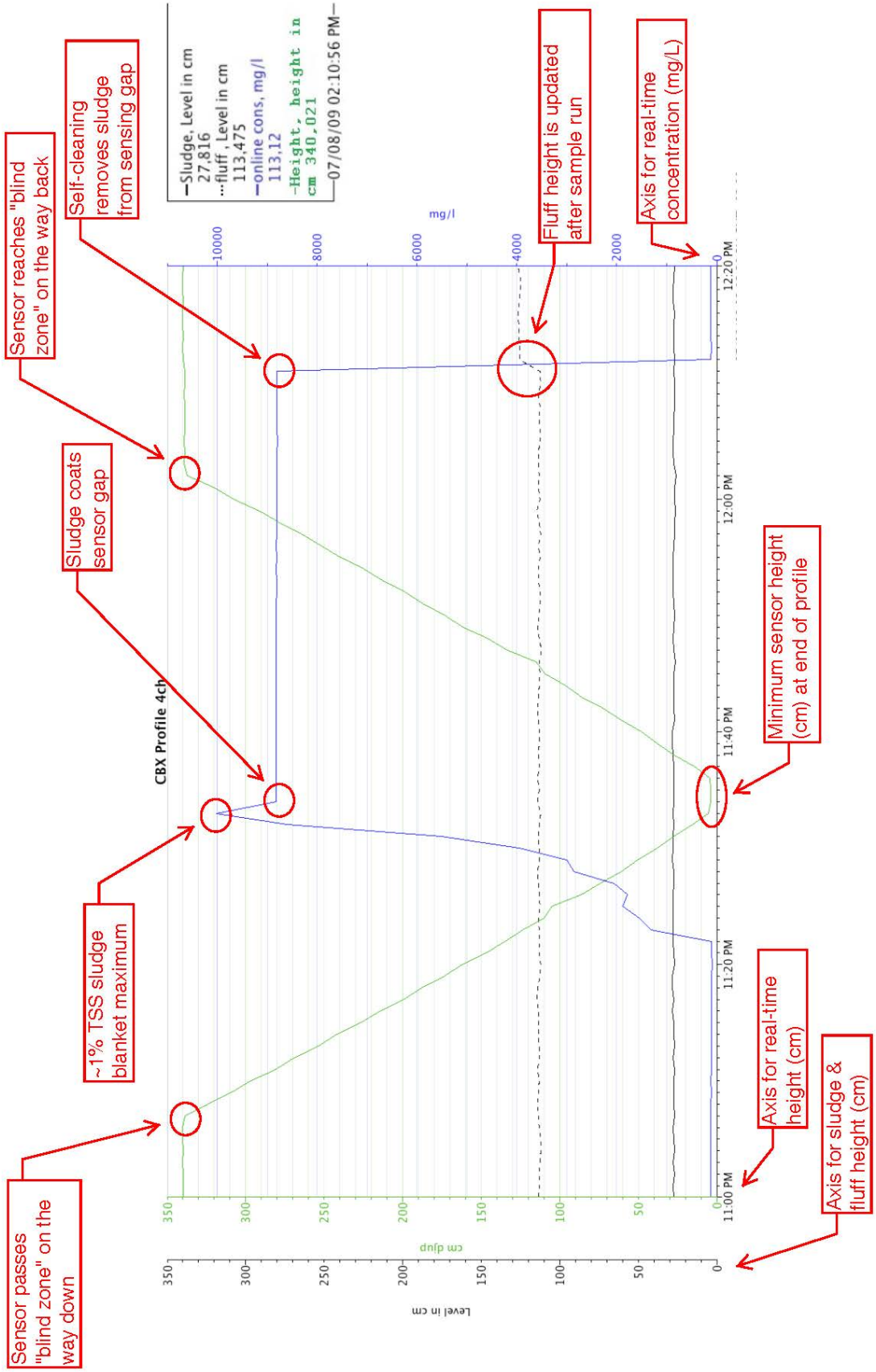

fig 4

Calibration

Before leaving the factory the CBX sensor is calibrated to give accurate measurement but during the lifetime of the system it might be necessary to re-calibrate the sensor. Even at installation, a re-calibration with sludge might improve the accuracy.
Zero calibration is done with clean, de-aerated water in a bucket. Sludge (Sample) calibration is done with a known concentration in a bucket.

Calibration of sensor

The operations below are done in the menu "Calibration" on the BB2.

1. Set the CBX in *config* mode (Calibration / Modes). The green LED on the door should now blink& continue to do so while making changes.

2. Set the sensor in a suitable calibration position (Calibration) by using " Manual up/down" - typically positioning the sensor approximately 1 meter under the flushing tube will be suitable.

3. Clean the sensor carefully, using a damp wet cloth. Check the sensor glass is clean and free from damage before continuing.

3. Put the sensor in a dark container with clean water (Zero Calibration) or sample sludge (Sample Calibration).

4. Go to "Take sample" in the menu and choose either "Zero" (for clean water) or "sample" depending on type of calibration to be performed.
The CBX will collect samples and the BB1/BB2 shows this with a pop-up window.

5. If you are doing a sludge calibration enter the "sample" concentration once lab test TSS value is known.

6. Use the *manual up / down* to retract the CBX sensor back to the home position.

7. Set the CBX back to *trig* mode (Calibration/Modes). This will back the sensor out of the menu & save values / changes / calibrations.

8. The green LED on the door should now be a constant green light for operation mode.

Detailed information of CBX

The sludge blanket monitor system is constructed from parts built inside a cabinet. The parts are described and illustrated in the sections below.

Main control board

The main control board controls the mechanical events in the cabinet and communicates with both sensor and BB1/BB2. The BB1/BB2 communication is done through RS-485 interface.

Other signals going in and out of the cabinet are also connected to the main control board.

The board collects the values of sludge concentration from the sensor and distributes them to the BB1/BB2 for presentation

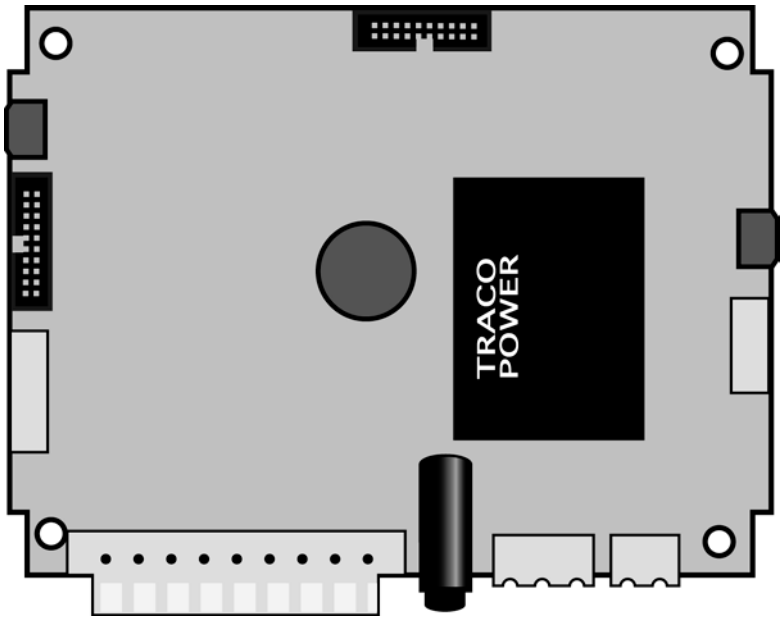

fig 5

Pickup board

The pickup board for the drum is used to transfer power and communication signals to the cable drum. It also decodes the movement of the cable drum using sensors.
The pickup board is mounted on a spring loaded lever arm.

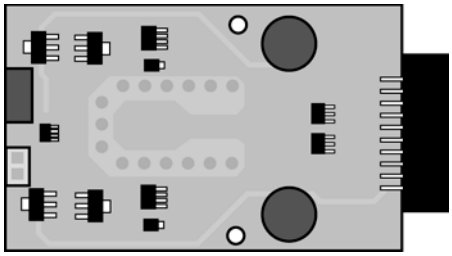

fig 6

Axle board

The axle board mounted on the cable drum is powered by contact free power (inductive) from the pickup board. It communicates with the main board via the pickup board and it communicates with the sensor through an optical RS-485 interface.

fig 7

Sensor

The sensor is connected to a cable that supplies it with power and transmits the communication signals. The sensor contains a near-infrared light source and a receiver that are positioned in such a way that the light passes through the liquid.

fig 8

Cable drum assembly

The cable drum moves the sensor up and down in the clarifier. It is mounted directly on the axle of a synchronous motor, hidden behind the drum mounting plate, with a very constant speed. Since the diameter of the cable roll in the drum varies, the speed of the sensor will vary. It will move slower during the end of the sampling cycle.

The cable and sensor are cleaned by a water spray in the flushing tube mounted below the SS enclosure during return of the sensor to the home position.

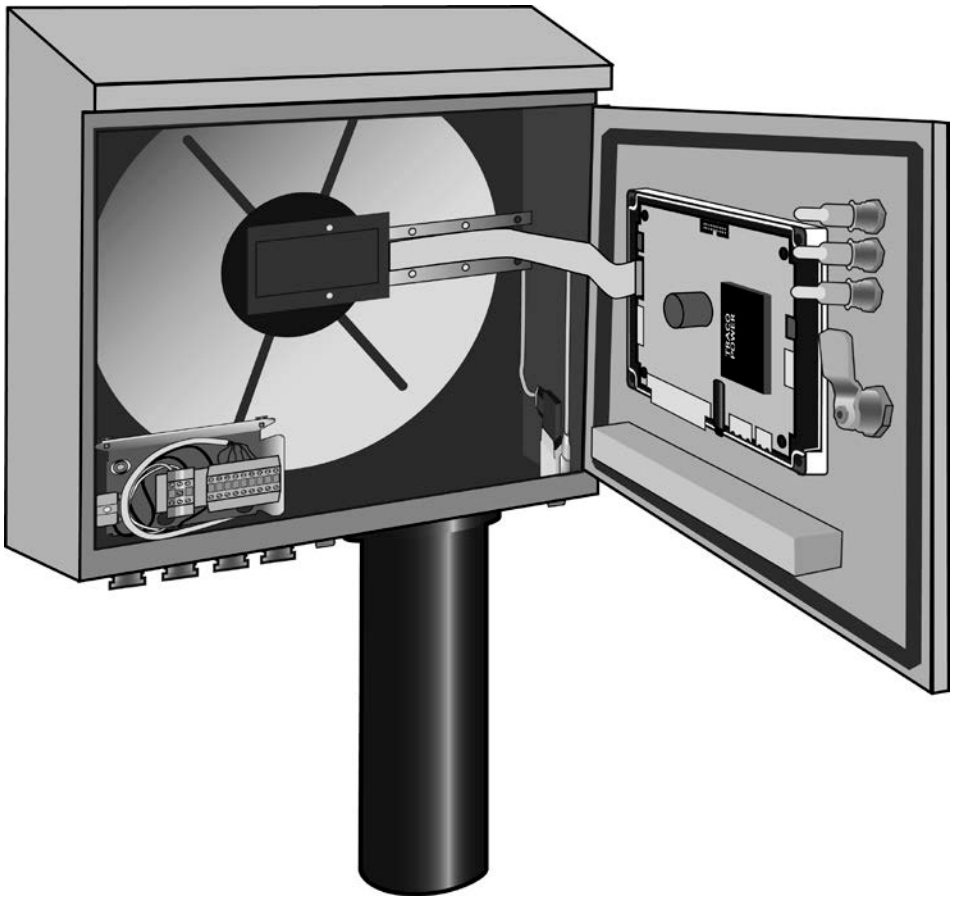

fig 9

Heater & fan

Hidden behind the drum mounting plate there is a heater which is used in cooperation with the fan to maintain a stable temperature inside the cabinet. The fan is mounted on the top right side of the cabinet, *fig10*.

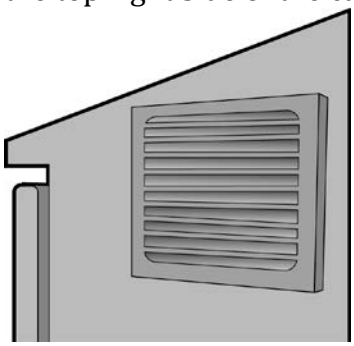

fig 10

Flushing tube & valve

The flushing tube contains a flushing nozzle ring that sprays cleaning water around the sensor and cable during the return or rising of the sensor to the home position.
The flushing valve is controlled by the main control board.

In the top of the flushing tube is the home position sensor. There is an inductive limit switch in the top of the flushing tube to determine the correct position or home position of the sensor. There is a SS clip on the cable for the limit switch to detect when in the home position, *fig 11*.

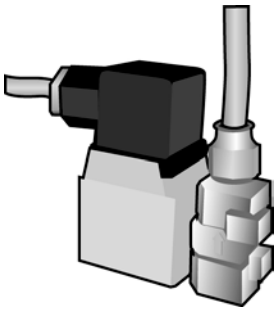

fig 11

Connection terminal

In the lower left corner of the cabinet there are connection terminals for the external wire connections. To the lower left corner of this terminal block there is a safety switch that will disconnect the power when the cabinet door is opened. There is also an emergency motor control switch that is located on the box for the terminal block inside the CBX. The switch can be located on top of the terminal box or under the lid, *fig 12*.

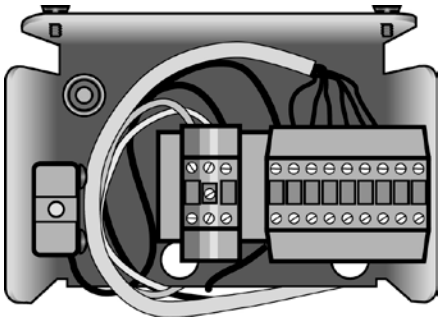

fig 12

Appendix 6 , Optional 4-20mA output module for BB1/BB2

Introduction

The BB1/BB2 4-20mA module is used to expand the BB1/BB2 central unit from two to four 4-20mA loops. It is assumed that the user is familiar with the BB1/BB2 and 4-20mA technology.

Module overview

The mA expansion module has two active 4-20mA outputs. The module is connected to the control box via a 34 pin connector, and fixed with three M2.5 screws.

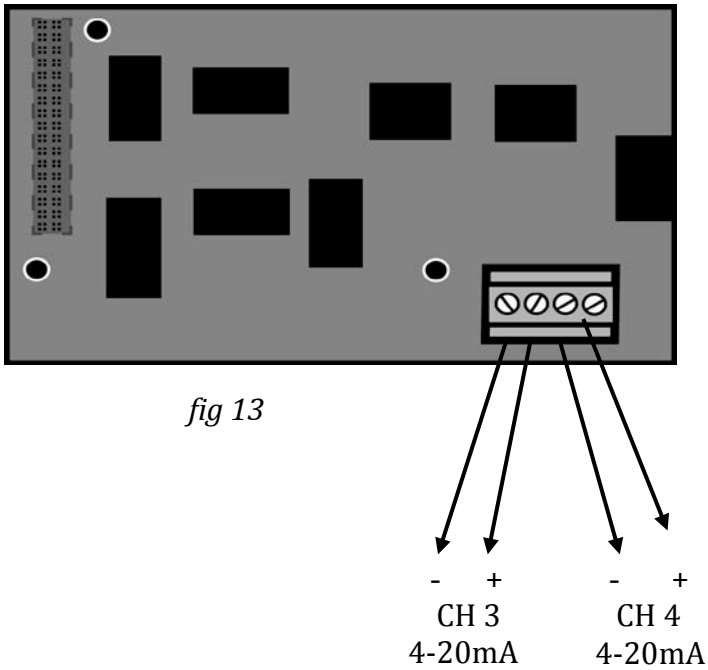

fig 13

Mounting of the 4-20mA expansion card in the BB1/BB2 control box

The 4-20mA module shall be mounted in a BB1/BB2 control box. Make sure the power to the control box is switched off before mounting the module.

Connect yourself and the control box chassis to protective ground before opening the antistatic package of the module to avoid static discharges that can damage the module or the box.

Be careful to get all 34 pins into their sockets. Fasten the module using the three M 2,5x5 screws that comes with the module.
When correctly mounted, the module will identify itself as “4-20mA” in the BB2 startup display, and under “Exp.module” in the BB2 Settings-menu.

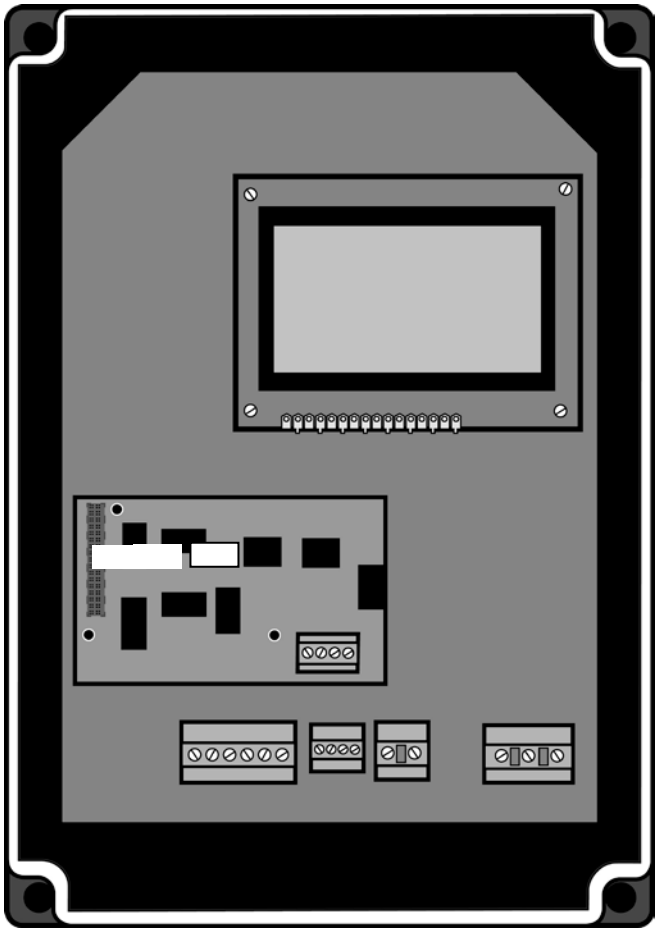

fig 14
Mounting the module in the control box

Wire connections

Connect the 4-20mA loops to the screw terminals according to the table below.

No	Name	Function
1	Ch3 -	Channel 3 return
2	Ch3 +	Channel 3 positive
3	Ch4 -	Channel 4 return
4	Ch4 +	Channel 4 positive

Getting started with the 4-20 mA module

A step by step guide to get the 4-20mA module up and running.

- Make sure the BB1/BB2 box to be used is switched off.
- Open the front door and locate the expansion module connector.
- Connect yourself and the control box chassis to protective ground before opening the antistatic package of the module to avoid static discharges that can damage the module or the box.
- Mount the module into the box, be careful to fit all 34 pins into the socket.
- Fasten the three M2.5x5 screws.
- Connect the mA loops, negative line to screw terminal 1, and 3, positive to terminal 2, and 4.
- Switch on the power to the BB1/BB2 box and check that the module identifies itself in the BB1/BB2 menu under Settings / Exp.module.
- Configure the sensor(s) that shall use channels 3, and 4 to do so in the sensor menu.

Technical specification for 4-20mA module

Manufacturer	Cerlic Controls AB, Sweden
Name	BBx 4-20mA expansion module
Measurement	86 x 54mm
Weight	35g
Ambient temp	-20 » 50°C (-4 » 122°F)
Storage temp	0 » 60°C (32 »140°F)
Output signals	Two (2) 4 – 20 mA (20 – 4 mA), galvanic isolated, 450 ohm

Maintenance

The electronics in the CBX is self-monitoring and requires very low maintenance. The mechanical parts need to be inspected at regular intervals and the optical parts may need cleaning.

Manual operation of CBX

It is possible initiate a manual trig of a sample. By holding down the "down arrow" for 5 sec on the BB1/BB2. The CBX starts a sampling cycle ASAP and returns the sensor back home and normal mode.

🡻 Starts lowering of sensor.

🡹 Stops lowering of sensor and returns the sensor home.

Maintenance schedule

Once a month	Once every 6 months	Once a year
Check sensor for buildup, clean with damp cloth if necessary	Clean sensor lens. Check if the sensor measures around 0 in clean water. If not perform a 0 calibration. Oil the cable guiding wheel with silicon spray.	General check and cleaning of mechanics, cable and fan filter.

Cable and sensor

Visually check that the cable is correctly wound on the drum and that cable does not show wear.

Sensor lenses.

Visual check of the lenses. Clean with Cerlic (CSC) sensor cleaning liquid and use a soft rag if necessary. Check for build up or "film" on lenses.

Fan

Air filter, remove the cover from the outside and check the filter. The air filter might need to be replaced or cleaned if the equipment is installed in a dusty environment. Remove the protective grating by popping it off with a screwdriver and put it back on by pressing it with your hand. Make sure the fan starts every time when the sensor is on the way up. Be aware of condensation inside the CBX which can cause problems.

Screws and nuts

Verify that everything is properly secured, no loose parts or rattling

Sensor check

The sensor is easily checked by immersion in clean water. This should give a low value of about 0 ppm . By putting something solid (a finger) in the gap a value of 3000 - 9999 depending on calibration, should be given.

Troubleshooting

If external power surges, or any other problems, have caused the electronics to stop, then a reset may be performed by switching the power OFF and then ON. This can easily be done by opening the CBX door and then closing.

Appendix 1, Mounting of CBX support Stand

The support consists of two brackets, left and right hand, and a crossbar brace. Assemble the parts according to the figure.

Hang the assembly on the handrail with the 1 ½" u-bolts or special L brackets for 4" or 6" handrails with supplied set screws. There are two leveling screws to adjust the stand to hang horizontal/vertical.

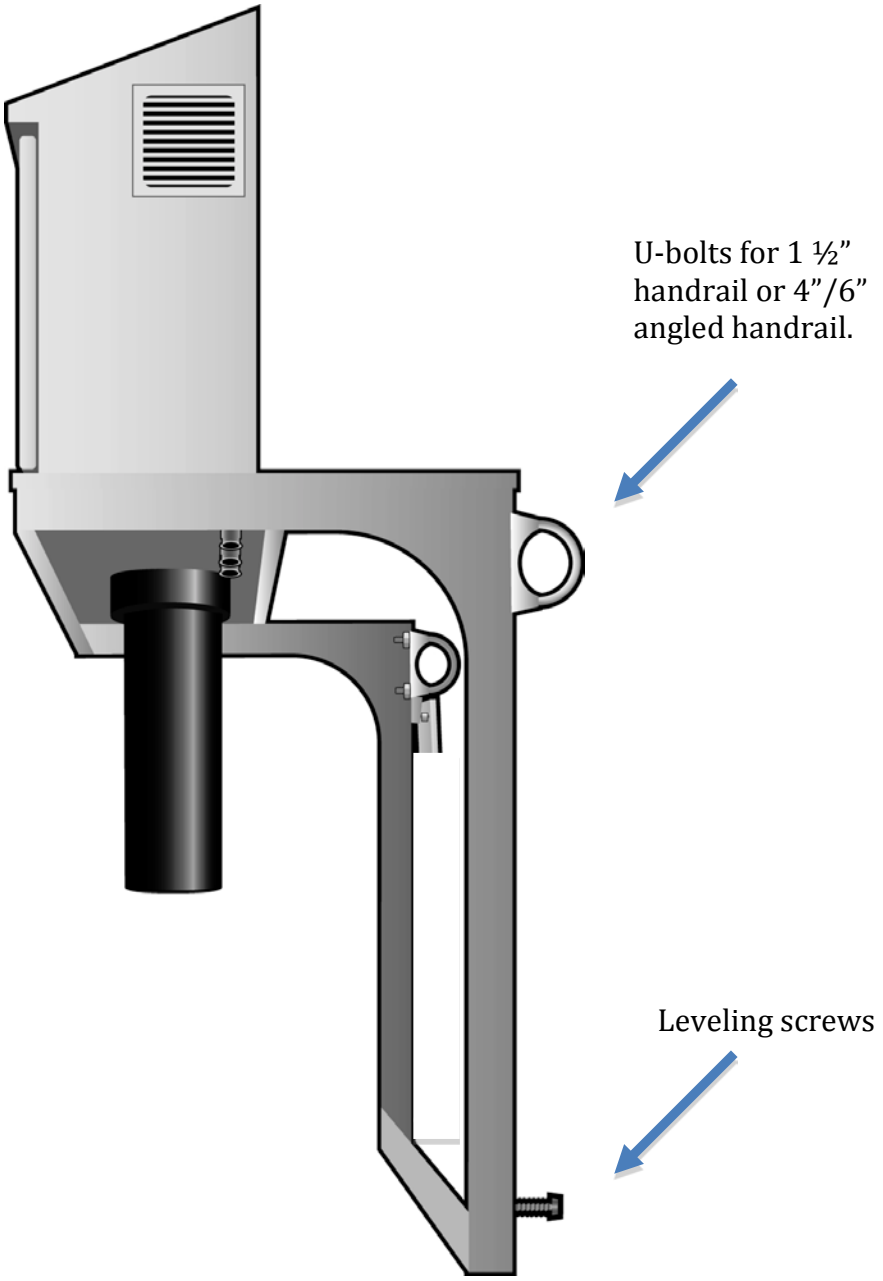

fig 15

Appendix 2, Mounting of flush pipe

Sensor and cable are cleaned with flush water from a hose or pipe connected to the cabinet. A G¼" (BSPP) male thread is located under the lower right hand corner of the cabinet which will typically ship with a bushing and barb fitting. Connect a hose of suitable diameter to fitting. NOTE: if you wish to use pipe for the installation please contact your local Cerlic Rep to discuss alternative fittings.

The water pressure must not exceed 6 bar (90 psi).

Appendix 3, A last check before starting the CBX:

1. Check that the sensor cable is properly wound on drum and cable guide.
2. Check that all screws and nuts are properly tightened.
3. Check that water hoses are tightly sealed and water is able to flow.
4, Check rake input switch is active and correctly configured.

Appendix 4, wiring diagram

Connection box for power supply & rake limit switch

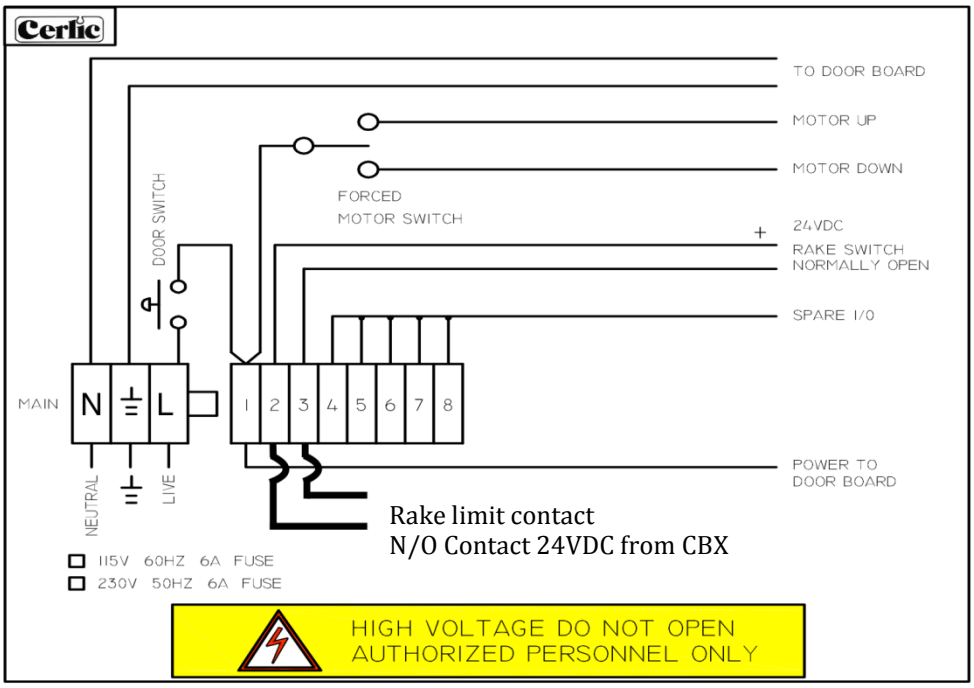

fig 16

Connection terminals for control board

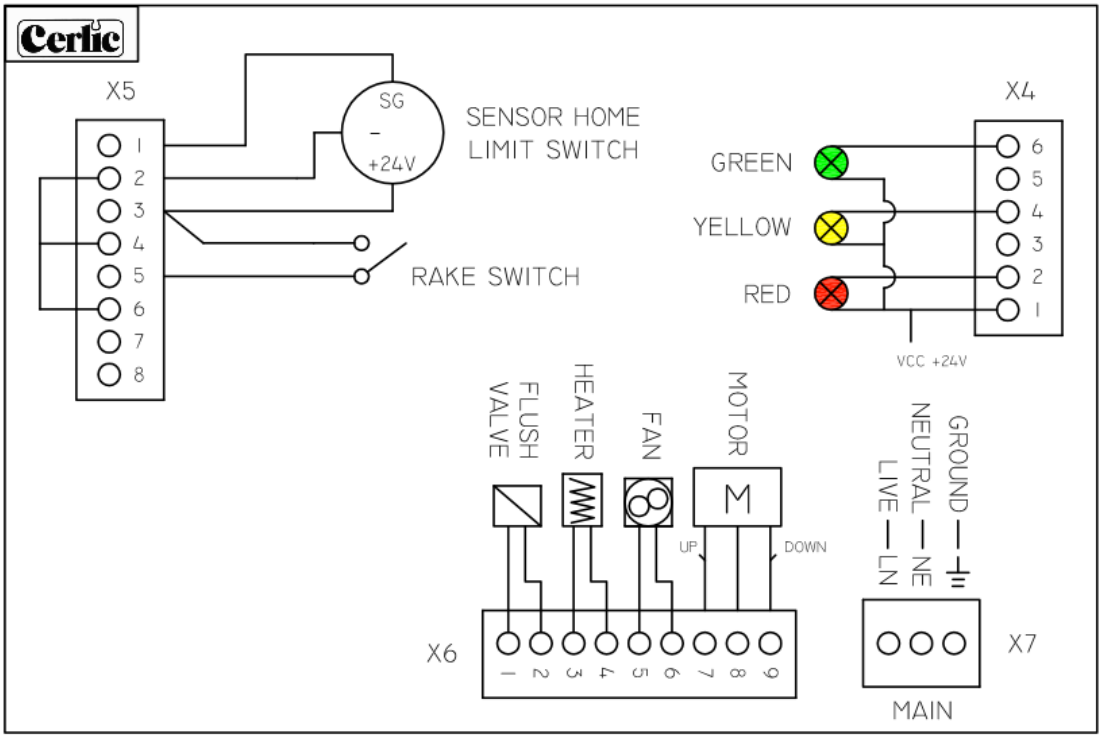

fig 17

Appendix 5, Safety instructions

The CBX is designed and manufactured with the greatest possible safety. It meets state-of-the art safety requirements and all relevant recommendations and standards.

The instrument is CE marked and follows EU directives and standards as listed below.

The electrical equipment fulfills applicable regulations and the electronics are encapsulated (IP 65, NEMA 4). Electrical connections must only be carried out by authorized personnel.

Certificate of conformity:

The CBX conforms to the following EC Directive(s) when installed in accordance with the installation instructions contained in the product documentation:

73/23/EEC Low Voltage Directive as amended by 93/68/EEC

89/336/EEC EMC Directive as amended by 92/31/EEC and 93/68/EEC

Standards

EN 61000-6-4:2001

Electromagnetic compatibility (EMC) Part 6-4

Generic standards – Emission standard for industrial environments

EN 61000-6-2:2001

Electromagnetic compatibility (EMC) Part 6-2

Generic standards - Immunity for industrial environments

EN 61010-1:2001

Safety requirements for electrical equipment for measurement,

control, and laboratory use

Appendix 6, Contact information

Actual visit and receiving address is always available at the Cerlic web page.

Europe
Cerlic Controls AB
Mälarvägen 3, SE 141 71 SEGELTORP, Sweden
Phone:+46 850 169 400/Fax: +46 850 169 429
Mail address: P.O. Box 5084, SE-141 05 KUNGENS KURVA, Sweden
web: www.cerlic.com

US & Canada
Cerlic Enviromental Controls, Inc
200 Burdette Road
Atlanta, GA 30327
Phone: 404-256-3097

Australia
Control Components Pty Ltd
Unit 19, 15-23 Kumulla Rd
Miranda, NSW, 2228
Phone: +61.2.9542.8977

Warranty

Instruments delivered from Cerlic Controls AB, are carefully checked and tested prior to the shipment.

> Cerlic warranty repair of the CBX if it is determined that the problem is any fault in manufacturing or equipment during the warranty period.

Appendix 7, Specification, CBX

Manufacturer	Cerlic Control AB, Sweden. Made in Sweden
Name	CBX
P/N	12705845A (220V/1/50) Europe 12705845B (110 V/1/60) US
Dimensions	See drawing page 16
Weight	21 Kg (46 Ib) incl. accessories
Enclosure	NEMA4 (IP65), Stainless steel
Measuring principle	Sounding by optical sensor with straight light transmission of NIR-light for suspended solids monitoring.
Supply voltage	115 V/1/60 Hz (US) P/N 12705845B 230-240 V 50 Hz (Europe / Aust) P/N 12705845A
Fuse (S1)	5A (T1AH, 20 x 5 mm fuse)
Power Usage	Max 450 W (24 V electronics)
Stand by power	10 W
Ambient temp	-5 » 50 ºC (22 » 122°F)
Optional Jacket	-20 » 50 ºC (-4 » 122°F)
Internal heating	Full power below 5°C (41°F), Off above 15°C (59°F)
Storage temp	-20 » 60°C (-4 » 140°F)
Rake Limit Switch	Closing contact normally open, 24VDC is supplied from CBX.
Sensor	Waterproof to 10m (30 ft.) in stainless steel 2343 with cable in PUR
Motor	1800 rpm synchronous with gearbox 1:100 (1500 rpm at 230 V)
Lowering speed	Max 15cm/s (12.5 cm/s @ 50 Hz) Full cycle time for 10 meters (33') is 3min.
Measuring range	0… 10 m (33')
Accuracy sensor	5 % Full Scale
Accuracy level	0.5 % Full Scale

Dimensions in mm (“)

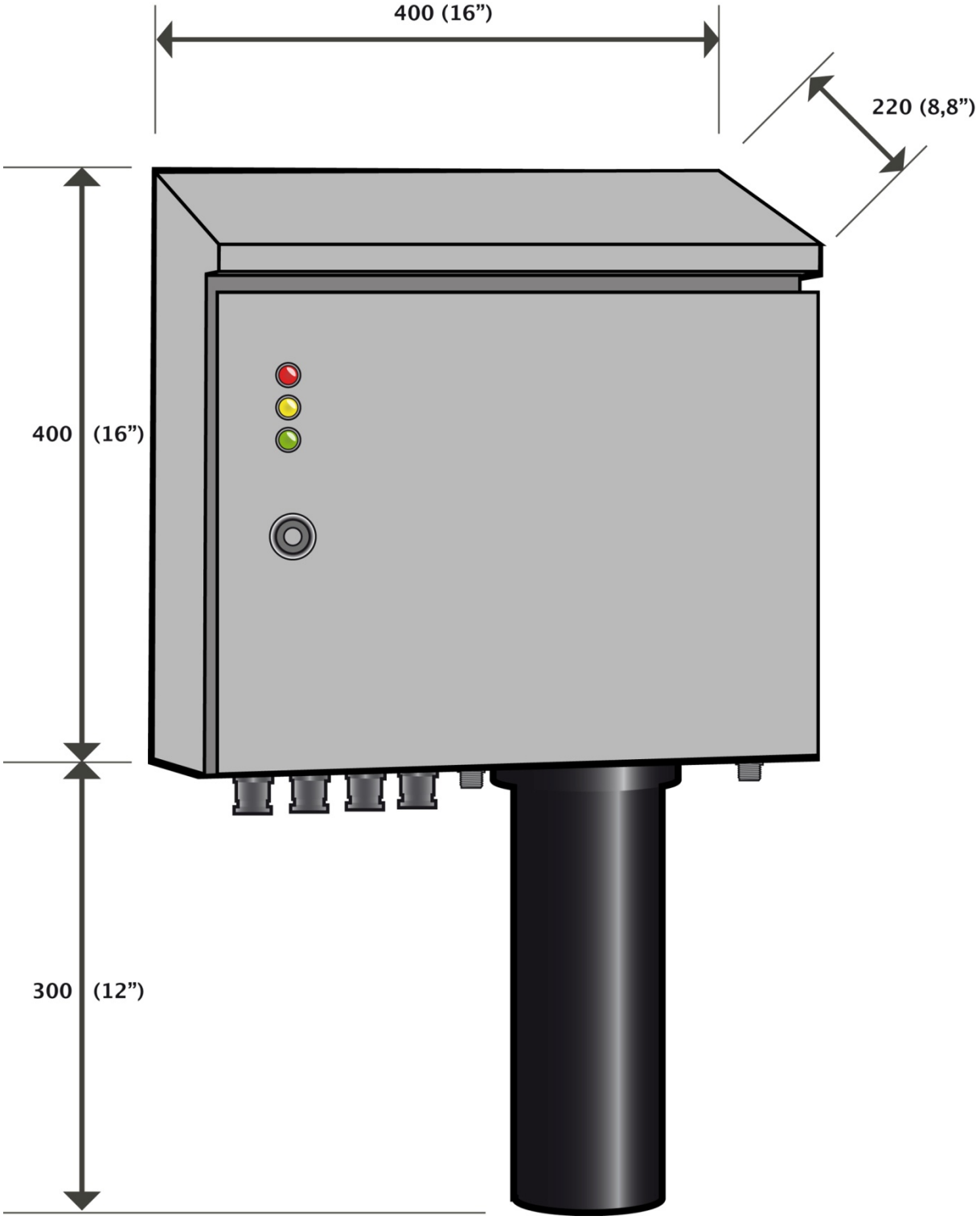

fig 18

Service form

Cerlic products are characteried by a high degree of quality and functionality. In the unlikely event of difficulties, please fill out this form, and if available, the support information form available as appendixes in the manuals - this is of real urgency if You wish to keep Your own settings after service. Please have the information at hand when contacting Cerlic service to verify the problem or before sending the product for service.
In order to secure our quality of service and to ensure customer satisfaction, please make sure you enclose a support form properly filled out when you send in products for repair. To avoid unnecessary cleanings costs, make sure Your products clean, before sending it to us.

Date: _____

Company: _____

Department: _____

Contact name: _____

Phone: _____

Email: _____

Product(s): _____

Serial No.(s): _____

Special Reference: _____

In order to get a fast and accurate service, please give a short description of what the problem is, when and how it occurs, and the environment where the equipment is installed.

Problem: _____

Occurrence: _____

_____

Environment: _____

_____

Additional Info:

Commissioning Details:

Company: _____

Site: _____

Contact name: _____

Phone: _____

E-mail: _____

Sensor Type: _____

Controller Type: _____

First go to the BBx menu, it is accessed by pressing ⬆ and ENTER at the same time for five seconds. Select *"System"* and select each of these to record values:

Version: _____

Serial: _____

Box temp: _____

Leave the BBx menu by pressing ⬆ and ENTER at the same time.

Go to the CBX sensor menu, it is accessed by pressing ENTER for five seconds. Select *"System"* and select each of these to record values:

Serial: _____

SoftW: _____

Info Ch1: _____ **Info Ch2:** _____

Leave the *System* menu.

In the "*Settings*" menu record the following parameters:

I-time: _____ **Trigger:** _____

Analogue: _____ **Max Depth (C):** _____

Second: _____ **Blind Zone (B):** _____

Blanket Conc: _____ **Rake Height:** _____

Fluff Conc: _____ **Track:** _____

Leave the *Settings* menu.

In the "*Scale / Alarm*" menu record the following parameters:

Max (E): _____(C-B = E) **Low Alarm:** _____

Min: _____ **Alarm Relay:** _____

High Alarm: _____

Leave the *Scale / Alarm* menu.

Leave the CBX sensor menu by pressing ⬆ and ENTER at the same time.

Notes: _____

_____

_____

_____

_____

_____